TOWN OF WHEATLAND/LILLY LAKE PROTECTION & REHABILITATION DISTRICT (LLP&RD)

KENOSHA COUNTY, WISCONSIN

LILLY LAKE OUTLET PROJECT

LEGEND

( ) INDICATES RECORDED DIMENSION WHERE DIFFERENT FROM ACTUAL MEASUREMENT
OR SECTION OR 1/4 SECTION CORNER AS DESCRIBED
1" DIA. IRON PIPE FOUND (UNLESS OTHERWISE NOTED)
1" DIA. IRON PIPE, 18" LONG-SET (UNLESS OTHERWISE NOTED)
BOLLARD
SOIL BORING/MONITORING WELL
FLAGPOLE
MAILBOX
SIGN
BILLBOARD
AIR CONDITIONER
CONTROL BOX
TRAFFIC SIGNAL
RAILROAD CROSSING SIGNAL
CABLE PEDESTAL
POWER POLE
GUY POLE
GUY WIRE
LIGHT POLE
SPOT/YARD/PEDESTAL LIGHT
HANDICAPPED PARKING
ELECTRIC MANHOLE
ELECTRIC PEDESTAL
ELECTRIC METER
ELECTRIC TRANSFORMER
TELEPHONE MANHOLE
TELEPHONE PEDESTAL
FO MARKED FIBER OPTIC
GAS VALVE
GAS METER
GAS WARNING SIGN
STORM MANHOLE
ROUND INLET
SQUARE INLET
STORM SEWER END SECTION
SANITARY MANHOLE
SANITARY CLEANOUT OR SEPTIC VENT
SANITARY INTERCEPTOR MANHOLE
MISCELLANEOUS MANHOLE
WATER VALVE
HYDRANT
WATER SERVICE CURB STOP
WATER MANHOLE
WELL
WATER SURFACE
WETLANDS FLAG
MARSH
CONIFEROUS TREE
DECIDUOUS TREE
SHRUB
—EDGE OF TREES
S —SANITARY SEWER
STO —STORM SEWER
W —WATERMAIN
G —MARKED GAS MAIN
E —MARKED ELECTRIC
OHW —OVERHEAD WIRES
B —BUREAU ELEC. SERV.
T —MARKED TELEPHONE
TV —MARKED CABLE TV LINE
FO —MARKED FIBER OPTIC
780 INDICATES EXISTING CONTOUR ELEVATION
× 780.55 INDICATES EXISTING SPOT ELEVATION

OWNER:
TOWN OF WHEATLAND/LLP&RD
P.O. BOX 797
34315 GENEVA RD
NEW MUNSTER, WI 53152-0797
PH.: 262/537-4340

ENGINEER:
R.A. SMITH, INC
16745 W BLUEMOUND RD
BROOKFIELD, WI 53005-5938
PH.: 262/781-1000

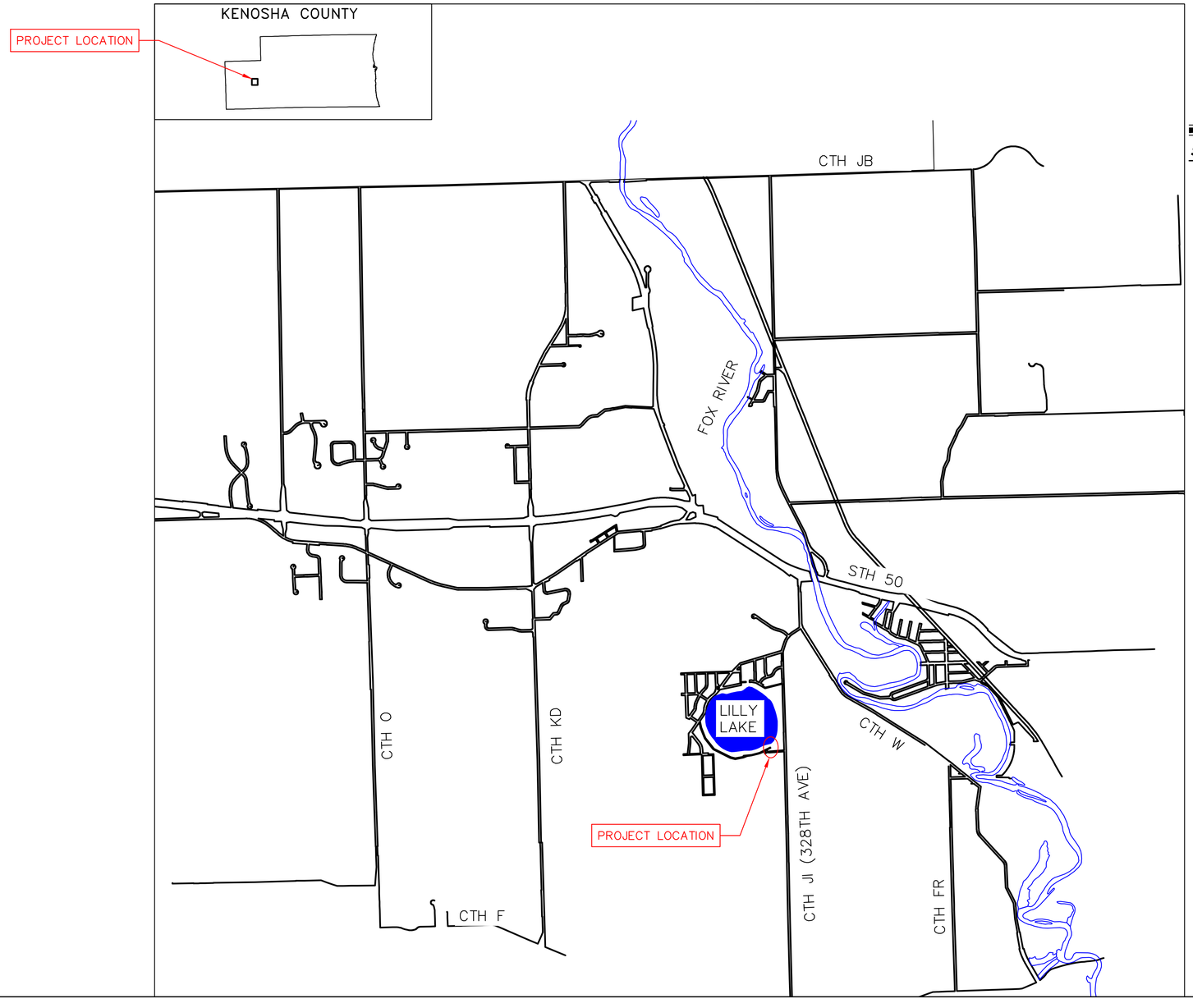

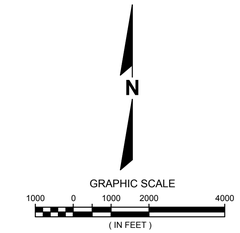

PLAN INDEX

SHEET NO.	DESCRIPTION
COVER	OVERALL PLAN
01	PLAN & PROFILE
02	CROSS SECTIONS
03	CROSS SECTIONS
04	CLEARING & GRUBBING PLAN
05	CLEARING & GRUBBING PLAN
06	PROJECT DETAILS
07	PROJECT DETAILS
08	PROJECT DETAILS
09	PROJECT DETAILS
10	PROJECT DETAILS
11	PROJECT DETAILS

811 Know what's below. Call before you dig.

R.A.SMITH, INC. ASSUMES NO RESPONSIBILITY FOR DAMAGES, LIABILITY OR COSTS RESULTING FROM CHANGES OR ALTERATIONS MADE TO THIS PLAN WITHOUT THE EXPRESSED WRITTEN CONSENT OF R.A.SMITH, INC.

DATE	DESCRIPTION

raSmith
CREATIVITY BEYOND ENGINEERING
16745 W. Bluemound Road
Brookfield, WI 53005-5938
(262) 781-1000
rasmith.com
Brookfield, WI | Milwaukee, WI | Appleton, WI | Madison, WI | Cedarburg, WI
Mount Pleasant, WI | Naperville, IL | Irvine, CA

TOWN OF WHEATLAND/LLP&RD
KENOSHA COUNTY, WISCONSIN

LILLY LAKE
OUTLET PROJECT
OVERALL PLAN

© COPYRIGHT 2020
R.A. Smith, Inc.

DATE: 9/03/2020
SCALE: 1" = 2000'
JOB NO. 1201901
PROJECT MANAGER: LEN J. ROECKER, P.E., P.L.S.
DESIGNED BY: DRR
CHECKED BY: LJR

SHEET NUMBER
COVER

H:\1201901\Dwg\1201901-Cover.dwg, Cover, 9/3/2020 7:56:15 AM, Drr

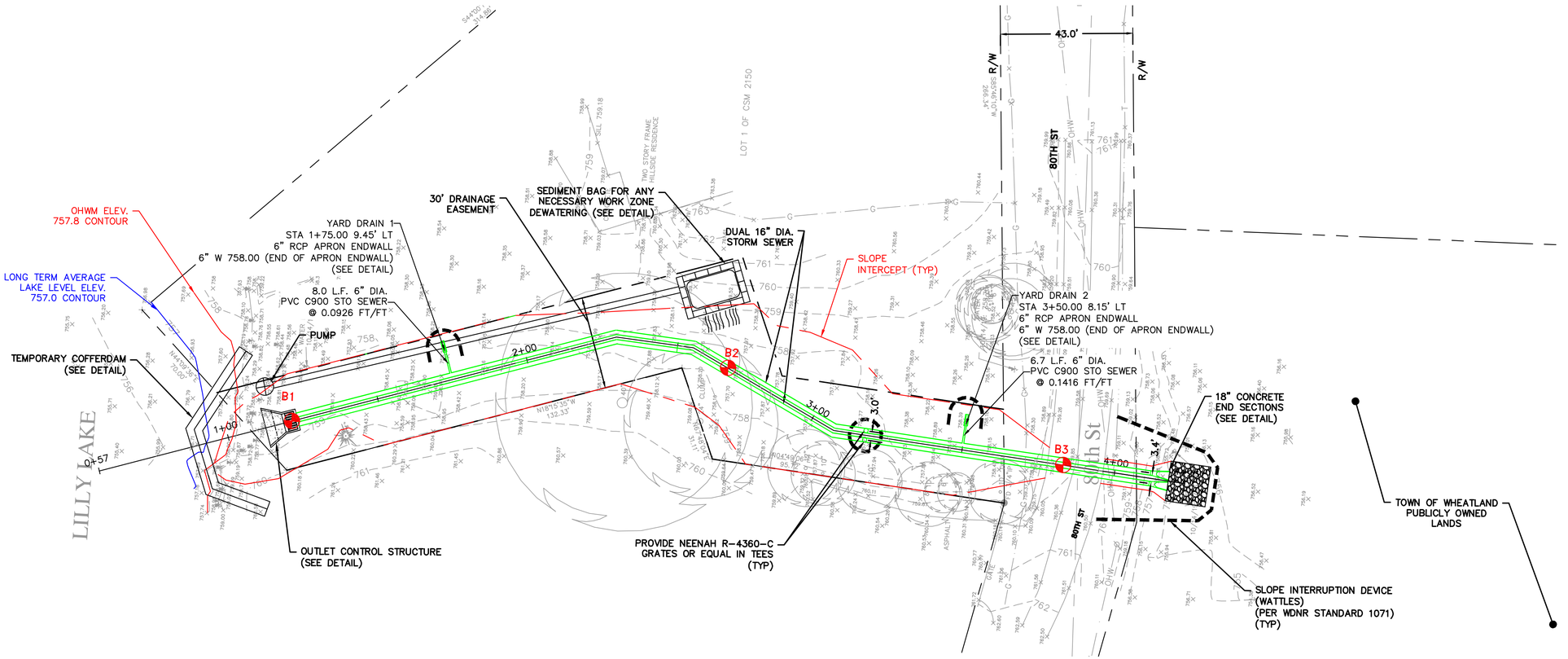

NOTES:

1. ALL DISTURBED TURF TO BE RESTORED WITH 4" TOPSOIL, SEED, FERTILIZER, AND EROSION MAT. ALL TURF RESTORATION INCIDENTAL.

2. ALL PAVEMENT RESTORATION INCIDENTAL TO THE PIPE WORK (SEE DETAIL).

3. POTHOLE EXISTING UTILITIES A MINIMUM OF 3 BUSINESS DAYS PRIOR TO CULVERT WORK TO VERIFY EXISTING ELEVATIONS. ANY UTILITY CONFLICTS RESULTING FROM THE POTHOLING TO BE REVIEWED BY THE OWNER AND ENGINEER.

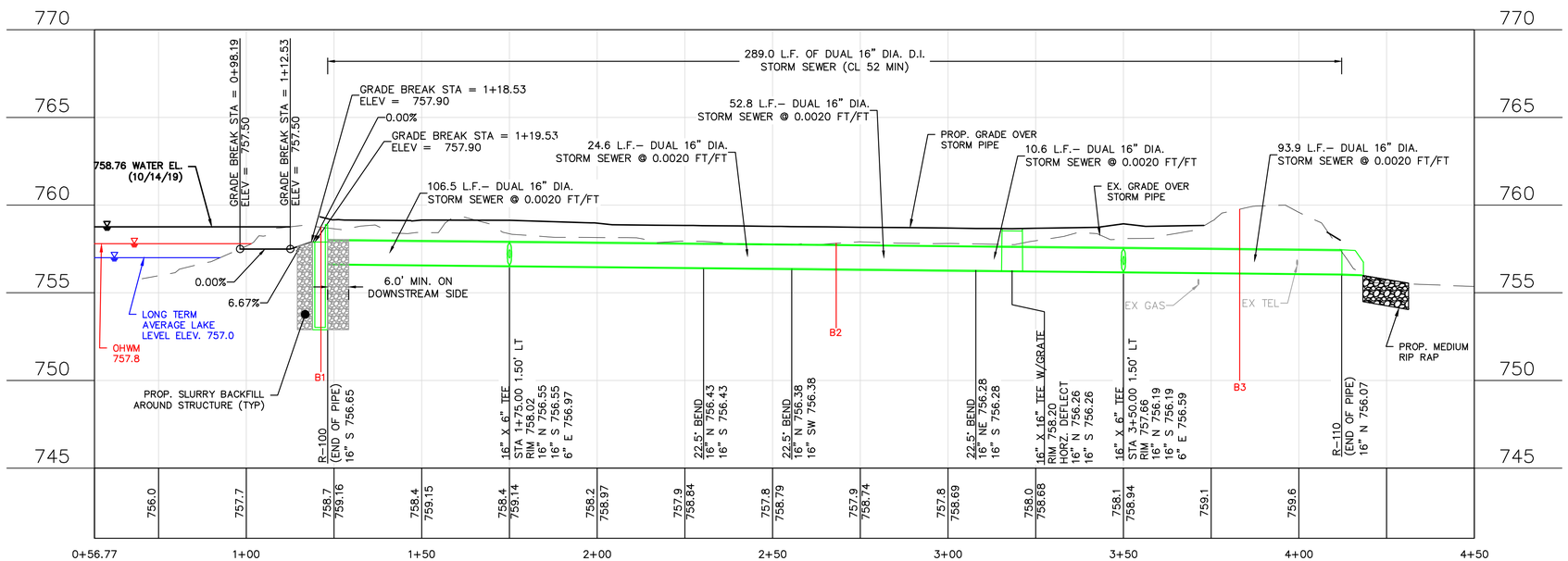

Know what's **below.** **Call** before you dig.

R.A.SMITH, INC. ASSUMES NO RESPONSIBILITY FOR DAMAGES, LIABILITY OR COSTS RESULTING FROM CHANGES OR ALTERATIONS MADE TO THIS PLAN WITHOUT THE EXPRESSED WRITTEN CONSENT OF R.A.SMITH, INC.

DESCRIPTION	DATE

raSmith
CREATIVITY BEYOND ENGINEERING
16745 W. Bluemound Road
Brookfield, WI 53005-5938
(262) 781-1000
rasmith.com
Brookfield, WI | Milwaukee, WI | Appleton, WI | Madison, WI | Cedarburg, WI
Mount Pleasant, WI | Naperville, IL | Irvine, CA

TOWN OF WHEATLAND/LLP&RD
KENOSHA COUNTY, WISCONSIN

LILLY LAKE
OUTLET PROJECT
PLAN & PROFILE

© COPYRIGHT 2020
R.A. Smith, Inc.

DATE: 9/03/2020
SCALE: 1" = 20'
JOB NO. 1201901
PROJECT MANAGER: LEN J. ROECKER, P.E., P.L.S.
DESIGNED BY: DRR
CHECKED BY: LJR

SHEET NUMBER
01

H:\1201901\Dwg\1201901h0.dwg, Plan & Profile, 9/3/2020 7:56:19 AM, Drr

1+75

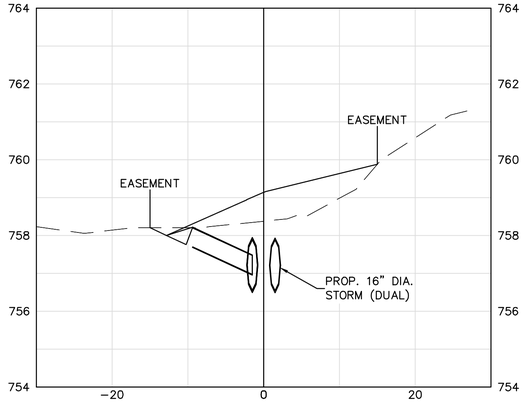

2+50

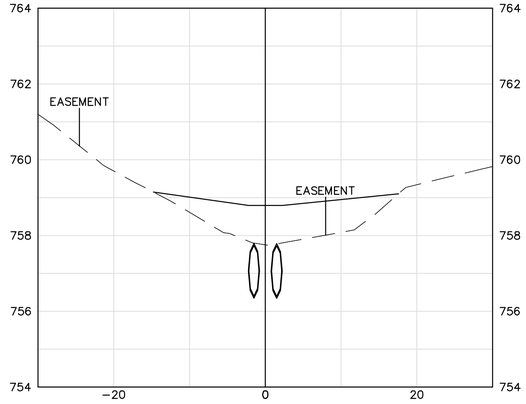

3+25

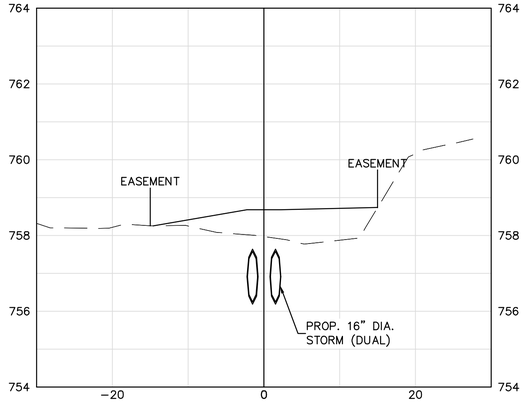

GRAPHIC SCALE

5 0 5 10 20

(IN FEET)

1+50

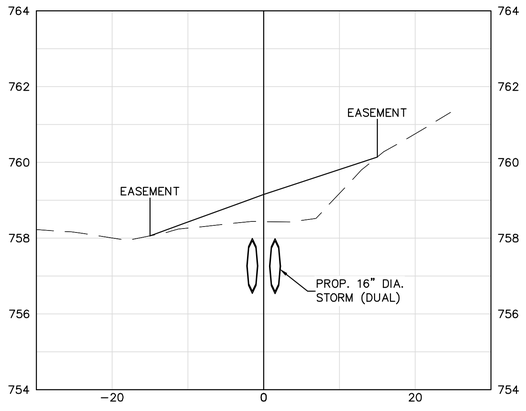

2+25

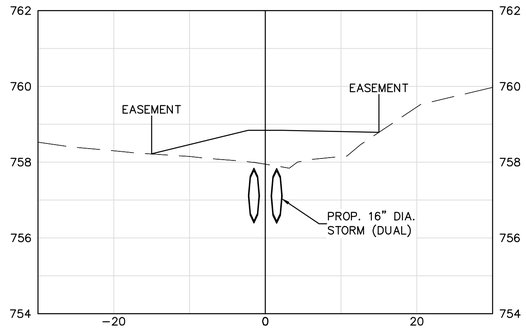

3+00

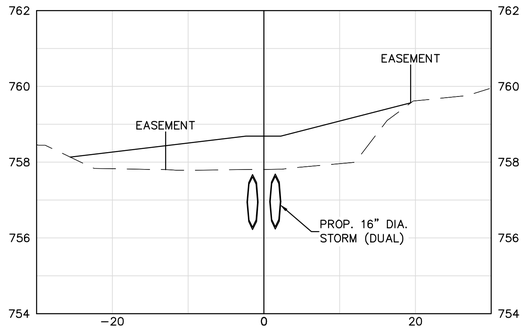

1+25.53

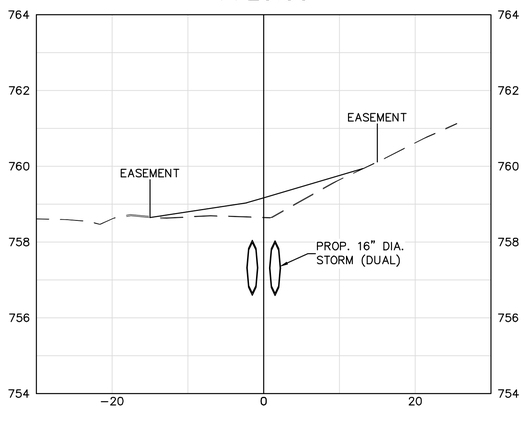

2+00

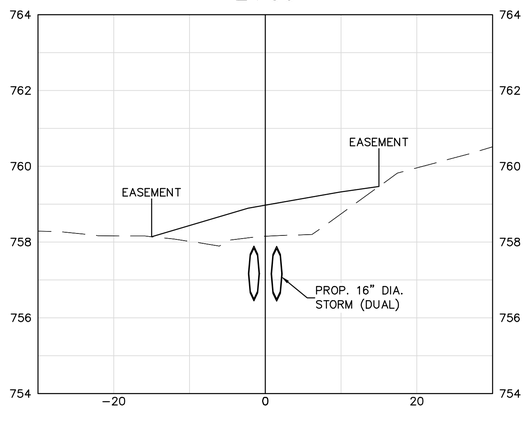

2+75

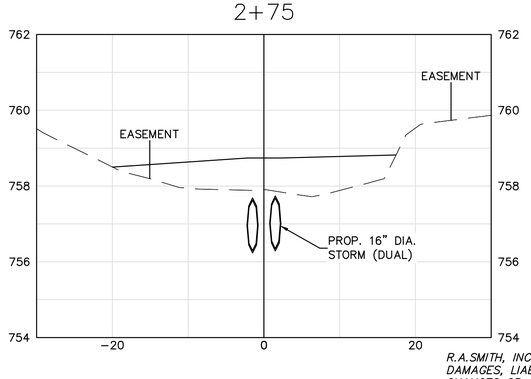

Know what's **below.**
Call before you dig.

R.A.SMITH, INC. ASSUMES NO RESPONSIBILITY FOR DAMAGES, LIABILITY OR COSTS RESULTING FROM CHANGES OR ALTERATIONS MADE TO THIS PLAN WITHOUT THE EXPRESSED WRITTEN CONSENT OF R.A.SMITH, INC.

DESCRIPTION | DATE

raSmith
CREATIVITY BEYOND ENGINEERING
16745 W. Bluemound Road
Brookfield, WI 53005-5938
(262) 781-1000
rasmith.com
Brookfield, WI | Milwaukee, WI | Appleton, WI | Madison, WI | Cedarburg, WI
Mount Pleasant, WI | Naperville, IL | Irvine, CA

TOWN OF WHEATLAND/LLP&RD
KENOSHA COUNTY, WISCONSIN

LILLY LAKE
OUTLET PROJECT
CROSS SECTIONS

© COPYRIGHT 2020
R.A. Smith, Inc.

DATE: **9/03/2020**
SCALE: **1" = 10'**
JOB NO. **1201901**
PROJECT MANAGER:
LEN J. ROECKER, P.E., P.L.S.
DESIGNED BY: **DRR**
CHECKED BY: **LJR**

SHEET NUMBER
02

H:\120190\Dwg\201901h0.dwg, Cross Sections, 9/3/2020 7:56:21 AM, Drr

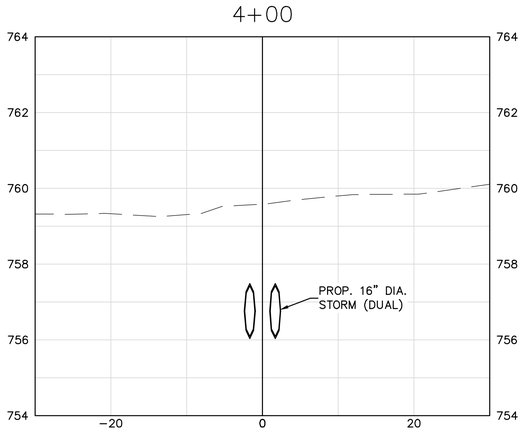

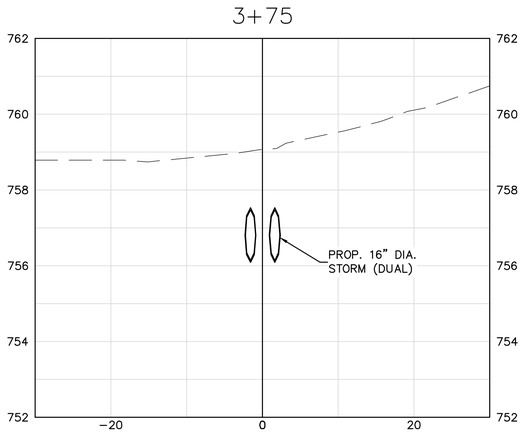

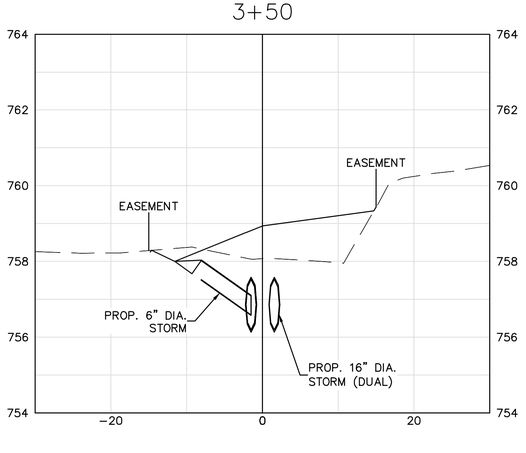

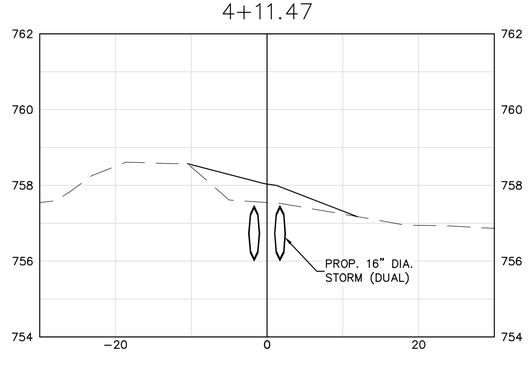

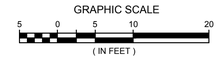

Know what's **below.**
Call before you dig.

R.A.SMITH, INC. ASSUMES NO RESPONSIBILITY FOR DAMAGES, LIABILITY OR COSTS RESULTING FROM CHANGES OR ALTERATIONS MADE TO THIS PLAN WITHOUT THE EXPRESSED WRITTEN CONSENT OF R.A.SMITH, INC.

DATE	DESCRIPTION

raSmith
CREATIVITY BEYOND ENGINEERING
16745 W. Bluemound Road
Brookfield, WI 53005-5938
(262) 781-1000
rasmith.com
Brookfield, WI | Milwaukee, WI | Appleton, WI | Madison, WI | Cedarburg, WI
Mount Pleasant, WI | Naperville, IL | Irvine, CA

TOWN OF WHEATLAND/LLP&RD
KENOSHA COUNTY, WISCONSIN

LILLY LAKE
OUTLET PROJECT
CROSS SECTIONS

© COPYRIGHT 2020
R.A. Smith, Inc.

DATE: **9/03/2020**
SCALE: **1" = 10'**
JOB NO. **1201901**
PROJECT MANAGER:
LEN J. ROECKER, P.E., P.L.S.
DESIGNED BY: **DRR**
CHECKED BY: **LJR**

SHEET NUMBER
03

H:\1201901\Dwg\1201901h0.dwg, Cross Sections2, 9/3/2020 7:56:22 AM, Drr

LEGEND

X = TREE CLEARING & GRUBBING (APPROXIMATE SIZE)

= BRUSH CLEARING & GRUBBING (UNLESS OTHERWISE NOTED)

GRAPHIC SCALE

5 0 5 10 20

(IN FEET)

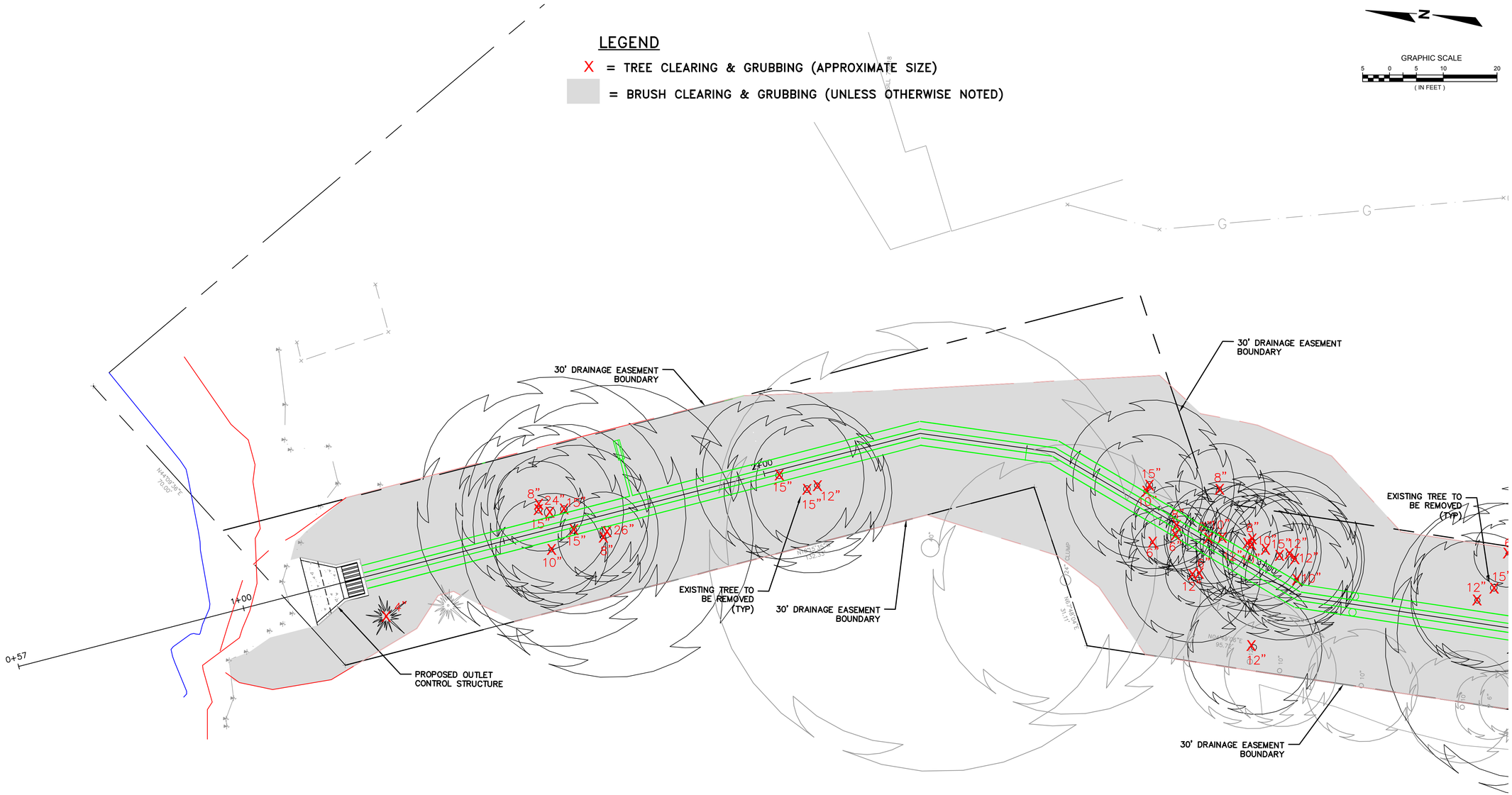

Know what's **below.** **Call** before you dig.

R.A.SMITH, INC. ASSUMES NO RESPONSIBILITY FOR DAMAGES, LIABILITY OR COSTS RESULTING FROM CHANGES OR ALTERATIONS MADE TO THIS PLAN WITHOUT THE EXPRESSED WRITTEN CONSENT OF R.A.SMITH, INC.

DATE	DESCRIPTION

raSmith
CREATIVITY BEYOND ENGINEERING
16745 W. Bluemound Road
Brookfield, WI 53005-5938
(262) 781-1000
rasmith.com
Brookfield, WI | Milwaukee, WI | Appleton, WI | Madison, WI | Cedarburg, WI
Mount Pleasant, WI | Naperville, IL | Irvine, CA

TOWN OF WHEATLAND/LLP&RD
KENOSHA COUNTY, WISCONSIN

LILLY LAKE
OUTLET PROJECT
CLEARING & GRUBBING PLAN

© COPYRIGHT 2020
R.A. Smith, Inc.

DATE: 9/03/2020

SCALE: 1" = 10'

JOB NO. 1201901

PROJECT MANAGER:
LEN J. ROECKER, P.E., P.L.S.

DESIGNED BY: DRR

CHECKED BY: LJR

SHEET NUMBER

04

H:\1201901\Dwg\1201901h0.dwg, Clearing & Grubbing, 9/3/2020 7:56:24 AM, Drr

LEGEND

X = TREE CLEARING & GRUBBING (APPROXIMATE SIZE)

= BRUSH CLEARING & GRUBBING (UNLESS OTHERWISE NOTED)

GRAPHIC SCALE
5 0 5 10 20
(IN FEET)

30' DRAINAGE EASEMENT BOUNDARY

30' DRAINAGE EASEMENT BOUNDARY

EXISTING TREE TO BE REMOVED (TYP)

30' DRAINAGE EASEMENT BOUNDARY

EXISTING TREE TO BE REMOVED (TYP)

30' DRAINAGE EASEMENT BOUNDARY

80TH ST

25.0'

25.0'

4+00

REMOVE ALL TREES AND BRUSH ABOVE GROUND LEVEL WITHIN SHADED AREA SOUTH OF 80TH ST.

Know what's **below.**
Call before you dig.

R.A.SMITH, INC. ASSUMES NO RESPONSIBILITY FOR DAMAGES, LIABILITY OR COSTS RESULTING FROM CHANGES OR ALTERATIONS MADE TO THIS PLAN WITHOUT THE EXPRESSED WRITTEN CONSENT OF R.A.SMITH, INC.

DESCRIPTION	DATE

raSmith
CREATIVITY BEYOND ENGINEERING
16745 W. Bluemound Road
Brookfield, WI 53005-5938
(262) 781-1000
rasmith.com
Brookfield, WI | Milwaukee, WI | Appleton, WI | Madison, WI | Cedarburg, WI
Mount Pleasant, WI | Naperville, IL | Irvine, CA

TOWN OF WHEATLAND/LLP&RD
KENOSHA COUNTY, WISCONSIN

LILLY LAKE
OUTLET PROJECT
CLEARING & GRUBBING PLAN

© COPYRIGHT 2020
R.A. Smith, Inc.

DATE: **9/03/2020**
SCALE: **1" = 10'**
JOB NO. **1201901**
PROJECT MANAGER:
LEN J. ROECKER, P.E., P.L.S.
DESIGNED BY: **DRR**
CHECKED BY: **LJR**

SHEET NUMBER
05

H:\1201901\Dwg\1201901h0.dwg, Clearing & Grubbing (2), 9/3/2020 7:56:26 AM, Drr

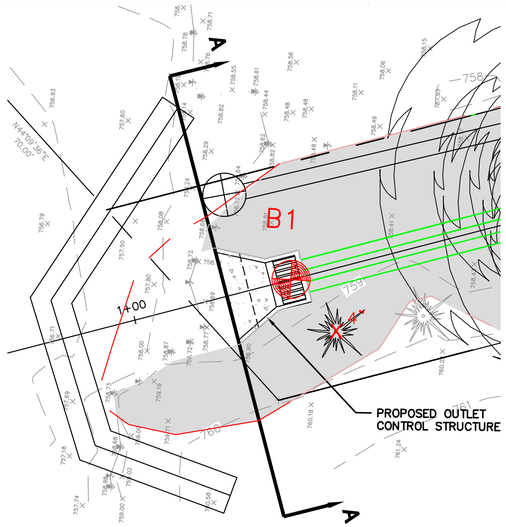

PLAN VIEW

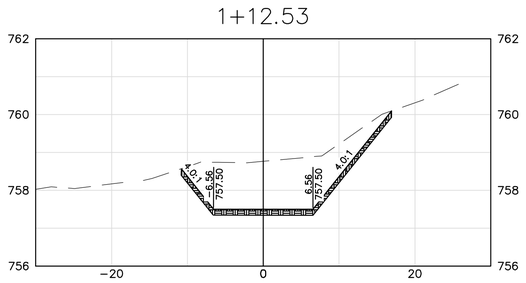

SECTION A-A

OUTLET CONTROL STRUCTURE GRADING DETAIL

R.A.SMITH, INC. ASSUMES NO RESPONSIBILITY FOR DAMAGES, LIABILITY OR COSTS RESULTING FROM CHANGES OR ALTERATIONS MADE TO THIS PLAN WITHOUT THE EXPRESSED WRITTEN CONSENT OF R.A.SMITH, INC.

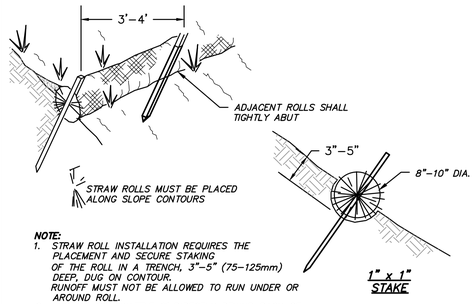

NOTE:
1. STRAW ROLL INSTALLATION REQUIRES THE PLACEMENT AND SECURE STAKING OF THE ROLL IN A TRENCH, 3"-5" (75-125mm) DEEP, DUG ON CONTOUR. RUNOFF MUST NOT BE ALLOWED TO RUN UNDER OR AROUND ROLL.
2. INSTALL 8.5" WATTLE 2' DIRECTLY BEHIND BACK OF CURB.

STRAW WATTLE DETAIL

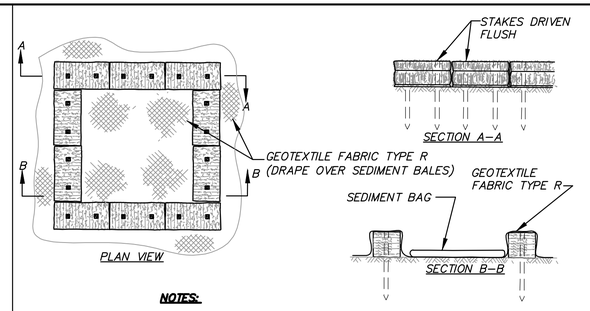

NOTES:
1. DEWATERING FACILITY TO BE SIZED BY THE CONTRACTOR BASED ON PUMPING RATE.
2. LOCATION OF DEWATERING FACILITY TO BE DETERMINED BY ENGINEER IN THE FIELD.
3. DEWATERING FACILITY TO BE LINED WITH GEOTEXTILE FABRIC TYPE R.
4. WATER SHALL BE PUMPED THROUGH A SEDIMENT BAG PLACED WITHIN THE DEWATERING FACILITY.
5. SEDIMENT BALE BARRIERS, GEOTEXTILE FABRIC TYPE R AND SEDIMENT BAGS SHALL BE REMOVED AND PROPERLY DISPOSED OF WHEN THEY HAVE SERVED THEIR USEFULNESS.

DEWATERING FACILITY DETAIL

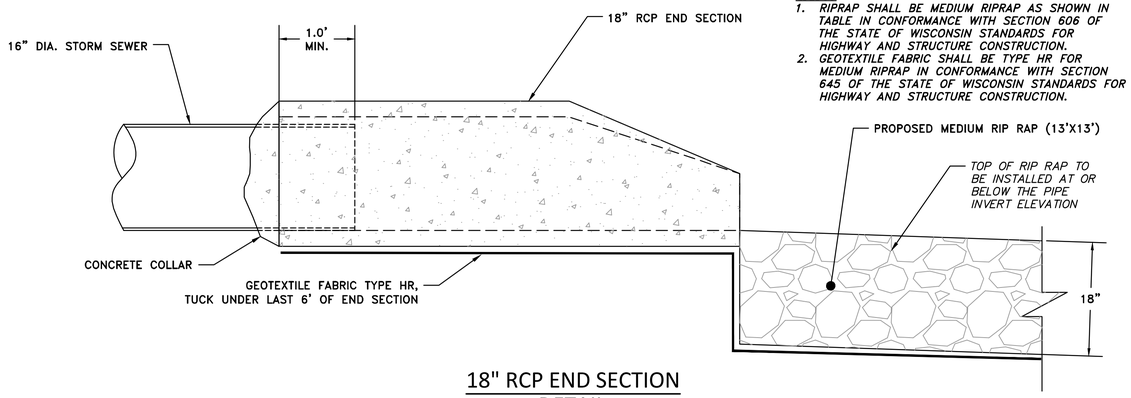

NOTES:
1. RIPRAP SHALL BE MEDIUM RIPRAP AS SHOWN IN TABLE IN CONFORMANCE WITH SECTION 606 OF THE STATE OF WISCONSIN STANDARDS FOR HIGHWAY AND STRUCTURE CONSTRUCTION.
2. GEOTEXTILE FABRIC SHALL BE TYPE HR FOR MEDIUM RIPRAP IN CONFORMANCE WITH SECTION 645 OF THE STATE OF WISCONSIN STANDARDS FOR HIGHWAY AND STRUCTURE CONSTRUCTION.

18" RCP END SECTION DETAIL

MATERIAL OPTIONS
- CONCRETE BLOCK/ BARRIERS
- LARGE SANDBAGS (1+C.Y.)
- APPROVED WATER BLADDER
- STEEL SHEETING/ ROAD PLATES

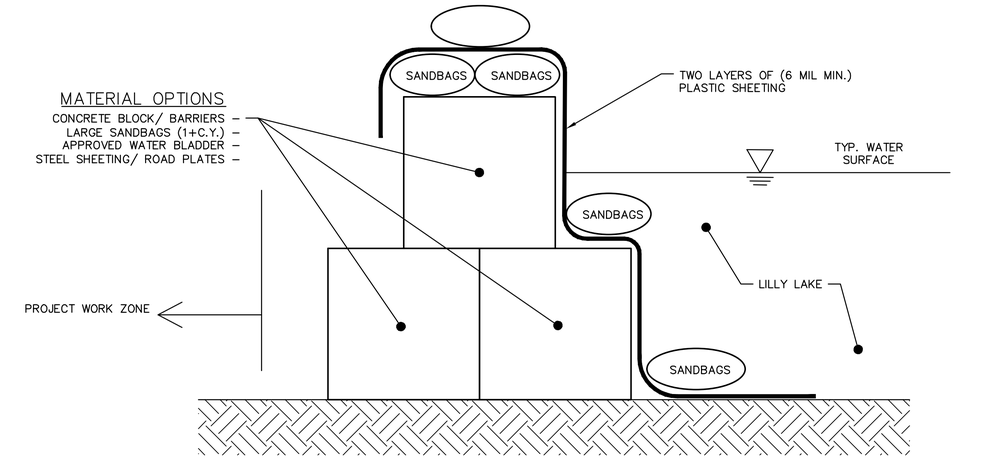

TEMPORARY COFFERDAM DETAIL

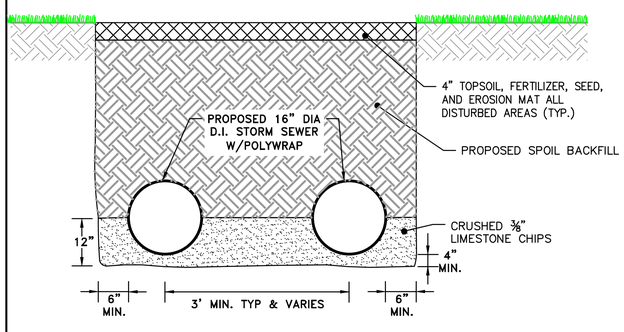

OPEN CUT CULVERT TRENCH DETAIL

STATION 1+20 TO 3+65

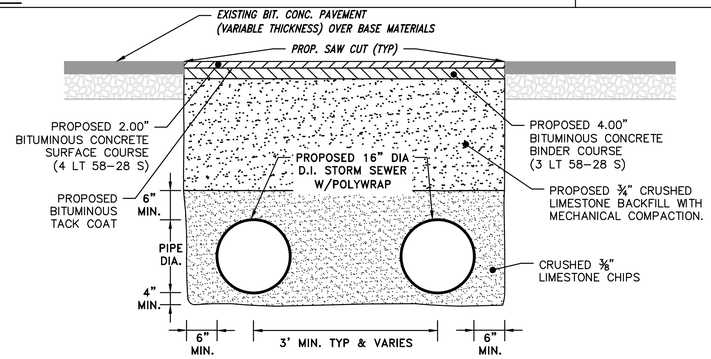

OPEN CUT CULVERT TRENCH DETAIL

WITHIN BOTH ST. R/W

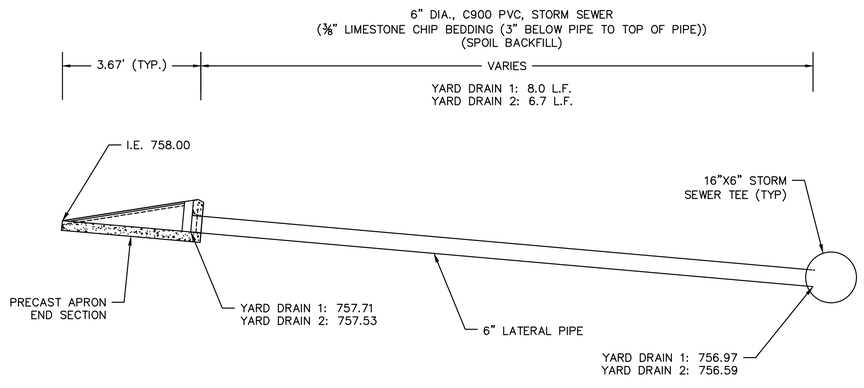

YARD DRAIN DETAIL

DESCRIPTION	DATE

raSmith
CREATIVITY BEYOND ENGINEERING
16745 W. Bluemound Road
Brookfield, WI 53005-5938
(262) 781-1000
rasmith.com
Brookfield, WI | Milwaukee, WI | Appleton, WI | Madison, WI | Cedarburg, WI
Mount Pleasant, WI | Naperville, IL | Irvine, CA

TOWN OF WHEATLAND/LLP&RD
KENOSHA COUNTY, WISCONSIN

LILLY LAKE
OUTLET PROJECT
PROJECT DETAILS

© COPYRIGHT 2020
R.A. Smith, Inc.

DATE: 9/03/2020
SCALE: N.T.S.
JOB NO. 1201901
PROJECT MANAGER: LEN J. ROECKER, P.E., P.L.S.
DESIGNED BY: DRR
CHECKED BY: LJR

SHEET NUMBER
06

H:\120190\Dwg\120190hD.dwg, Details, 9/3/2020 7:56:27 AM, Drr

R.A.SMITH, INC. ASSUMES NO RESPONSIBILITY FOR DAMAGES, LIABILITY OR COSTS RESULTING FROM CHANGES OR ALTERATIONS MADE TO THIS PLAN WITHOUT THE EXPRESSED WRITTEN CONSENT OF R.A.SMITH, INC.

SDD 8f1 Apron Endwalls for Culvert Pipe

METAL APRON ENDWALLS

PIPE DIA. (IN.)	MIN. THICK. (Inches) STEEL	MIN. THICK. (Inches) ALUM.	DIMENSIONS (Inches) A (±1")	B (MAX.)	H (±1")	L (±1 1/2")	L1 ①	L2 ①	W (±2")	APPROX. SLOPE	BODY
12	.064	.060	6	6	6	21	12	17 1/2	24	2 1/2 to 1	1 Pc.
15	.064	.060	7	8	6	26	14	21 3/4	30	2 1/2 to 1	1 Pc.
18	.064	.060	8	10	6	31	15	28 1/4	36	2 1/2 to 1	1 Pc.
21	.064	.060	9	12	6	36	18	29 5/8	42	2 1/2 to 1	1 Pc.
24	.064	.075	10	13	6	41	18	37 1/4	48	2 1/2 to 1	1 Pc.
30	.079	.075	12	16	8	51	18	52 1/4	60	2 1/2 to 1	1 Pc.
36	.079	.105	14	19	9	60	24	59 3/4	72	2 1/2 to 1	2 Pc.
42	.109	.105	16	22	11	69	24	75 5/8	84	2 1/2 to 1	2 Pc.
48	.109	.105	18	27	12	78	24	81	90	2 1/4 to 1	3 Pc.
54	.109	.105	18	30	12	84	30	85 1/2	102	2 1/4 to 1	3 Pc.
60	.109×	.105×	18	33	12	87	—	—	114	2 to 1	3 Pc.
66	.109×	.105×	18	36	12	87	—	—	120	2 to 1	3 Pc.
72	.109×	.105×	18	39	12	87	—	—	126	2 to 1	3 Pc.
78	.109×	.105×	18	42	12	87	—	—	132	1 1/2 to 1	3 Pc.
84	.109×	.105×	18	45	12	87	—	—	138	1 1/2 to 1	3 Pc.
90	.109×	.105×	18	37	12	87	—	—	144	1 1/2 to 1	3 Pc.
96	.109×	.105×	18	35	12	87	—	—	150	1 1/2 to 1	3 Pc.

× EXCEPT CENTER PANEL SEE GENERAL NOTES

REINFORCED CONCRETE APRON ENDWALLS

PIPE DIA. (IN.)	DIMENSIONS (Inches) T	A	B	C	D	E	G	APPROX. SLOPE
12	2	4	24	48 1/8	72 1/8	24	2	3 to 1
15	2 1/4	6	27	46	73	30	2 1/4	3 to 1
18	2 1/2	9	27	46	73	36	2 1/2	3 to 1
21	2 3/4	9	36	37 1/2	73 1/2	42	2 3/4	3 to 1
24	3	9 1/2	43 1/2	30	73 1/2	48	3	3 to 1
27	3 1/4	10 1/2	49 1/2	24	73 1/2	54	3 1/4	3 to 1
30	3 1/2	12	54	19 3/4	73 1/2	60	3 1/2	3 to 1
36	4	15	63	34 3/4	97 3/4	72	4	3 to 1
42	4 1/2	21	63	35	98	78	4 1/2	3 to 1
48	5	24	72	26	98	84	5	3 to 1
54	5 1/2	27	65	* 33 1/4 - ** 35	* 98 1/4 - ** 100	90	5 1/2	2 2/5 to 1
60	6	* ** 30-35	60	39	99	96	5	2 to 1
66	6 1/2	* ** 24-30	* ** 72-78	* ** 21-27	99	102	5 1/2	2 to 1
72	7	* ** 24-36	78	21	99	108	6	2 to 1
78	7 1/2	* ** 24-36	78	21	99	114	6 1/2	2 to 1
84	8	36	90 1/2	21	111 1/2	120	6 1/2	1 1/2 to 1
90	8 1/2	41	87 1/2	24	111 1/2	132	6 1/2	1 1/2 to 1

* MINIMUM
** MAXIMUM

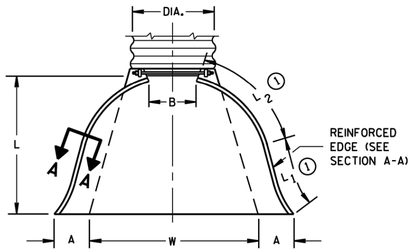

PLAN VIEW

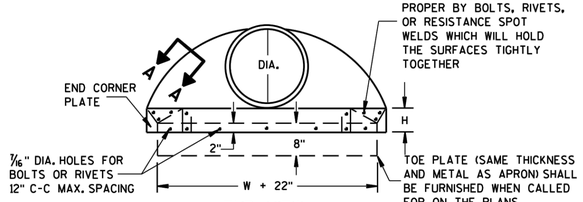

END VIEW

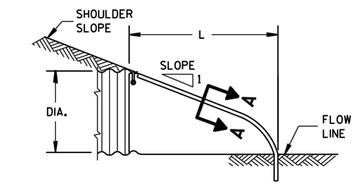

SIDE ELEVATION

METAL ENDWALLS

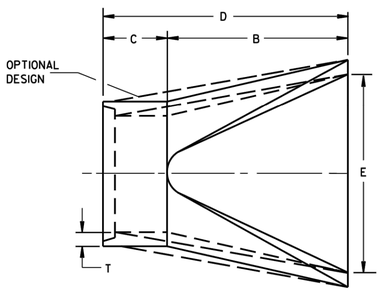

PLAN

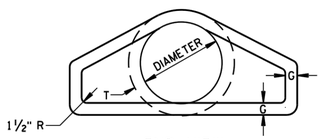

END VIEW

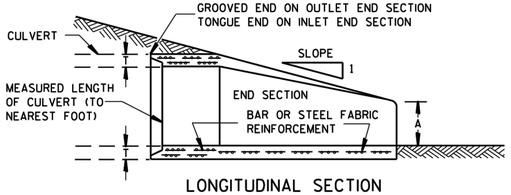

LONGITUDINAL SECTION

CONCRETE ENDWALLS

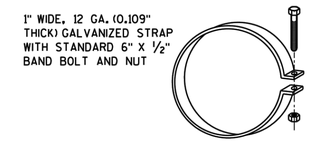

ALTERNATE FOR TYPE 1 CONNECTION

END SECTION CONNECTOR STRAP

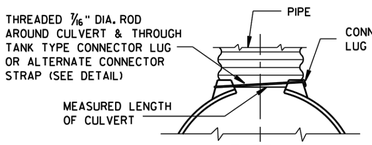

TYPE 1
FOR 12" THRU 24" CORR. PIPE

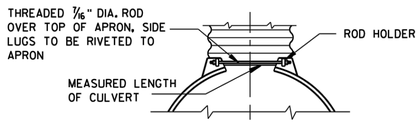

TYPE 2
FOR 30" THRU 96" CORR. PIPE

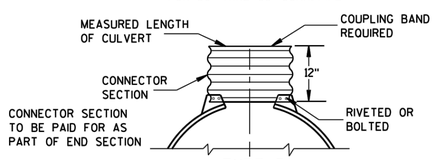

TYPE 3
FOR 42" THRU 96" CORR. PIPE

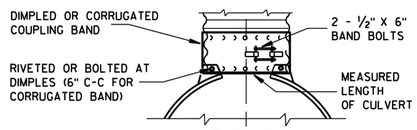

TYPE 5
ALTERNATE FOR:
ALL SIZES CORRUGATED CIRCULAR PIPE

NOTE: DIMPLED BAND FITS OVER OUTSIDE OF ENDWALL, AND CORRUGATED BAND FITS INSIDE ENDWALL. DIMPLED BAND MAY BE USED WITH HELICALLY CORRUGATED PIPE.

FOR CIRCUMFERENTIALLY CORRUGATED PIPE USE ENDWALL CONNECTION DETAILS 1, 2, 3 OR 5 AS APPLICABLE.

FOR HELICALLY CORRUGATED PIPE USE ENDWALL CONNECTION DETAILS 1, 2 OR 5.

FOR HELICALLY CORRUGATED PIPES WITH TWO CIRCUMFERENTIAL CORRUGATIONS AT EACH END USE ENDWALL CONNECTION DETAILS 1, 2 OR 3.

CONNECTION DETAILS

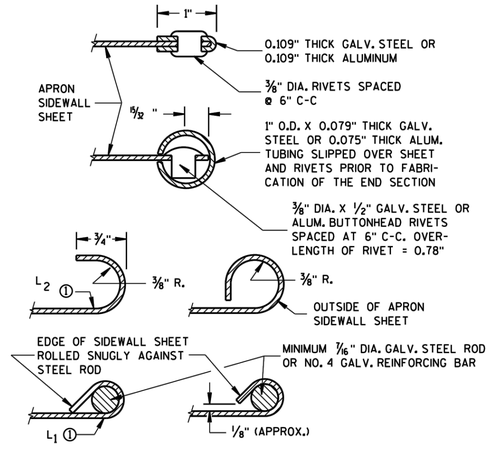

SECTION A-A

GENERAL NOTES

DETAILS OF CONSTRUCTION, MATERIALS AND WORKMANSHIP NOT SHOWN ON THIS DRAWING SHALL CONFORM TO THE PERTINENT REQUIREMENTS OF THE STANDARD SPECIFICATIONS AND THE APPLICABLE SPECIAL PROVISIONS.

CONCRETE CULVERT ENDWALLS MAY NOT BE USED WITH GALVANIZED STEEL OR ALUMINUM CULVERT PIPE OR VISE VERSA. GALVANIZED STEEL OR ALUMINUM ENDWALLS SHALL NORMALLY BE INSTALLED ON CULVERT PIPE OF THE SAME METAL.

ALL THREE PIECE STEEL APRON ENDWALLS FOR 60" DIAMETER PIPE AND LARGER SHALL HAVE 0.109" SIDES AND 0.138" CENTER PANELS. ALL THREE PIECE ALUMINUM APRON ENDWALLS FOR 60" DIAMETER PIPE AND LARGER SHALL HAVE 0.105" SIDES AND 0.134" CENTER PANELS. THE WIDTH OF CENTER PANELS SHALL BE GREATER THAN 20 PERCENT OF THE PIPE PERIMETER.

LAP SEAMS SHALL BE TIGHTLY JOINED BY GALVANIZED RIVETS OR BOLTS FOR STEEL UNITS AND ALUMINUM RIVETS AND BOLTS FOR ALUMINUM UNITS. FOR THE 60" THROUGH 96" DIAMETER APRON ENDWALL SIZES, THE REINFORCED EDGES AND CENTER PANEL SEAMS SHALL BE FURTHER REINFORCED WITH GALVANIZED STEEL OR ALUMINUM STIFFENER ANGLES. THE ANGLES SHALL BE ATTACHED BY GALVANIZED NUTS AND BOLTS FOR STEEL UNITS AND ALUMINUM NUTS AND BOLTS FOR ALUMINUM UNITS.

WHERE TWO OR MORE PIPES WITH APRON ENDWALLS ARE LAID ADJACENT TO EACH OTHER, THEY SHALL BE SEPARATED BY A DISTANCE SUFFICIENT TO PROVIDE A MINIMUM CLEARANCE OF 6 INCHES BETWEEN APRON ENDWALLS.

① FOR PIPE SIZES UP TO 60" DIAMETER, A 180° ROLLED EDGE MAY BE USED INSTEAD OF STEEL ROD REINFORCEMENT. SEE SECTION A-A.

APRON ENDWALLS FOR CULVERT PIPE

STATE OF WISCONSIN
DEPARTMENT OF TRANSPORTATION

APPROVED
8-30-94 DATE
/S/ Rory L. Rhinesmith
CHIEF ROADWAY DEVELOPMENT ENGINEER
FHWA

S.D.D. 8 F 1-11

6

DESCRIPTION	DATE

raSmith
CREATIVITY BEYOND ENGINEERING
16745 W. Bluemound Road
Brookfield, WI 53005-5938
(262) 781-1000
rasmith.com
Brookfield, WI | Milwaukee, WI | Appleton, WI | Madison, WI | Cedarburg, WI
Mount Pleasant, WI | Naperville, IL | Irvine, CA

TOWN OF WHEATLAND/LLP&RD
KENOSHA COUNTY, WISCONSIN

LILLY LAKE
OUTLET PROJECT
PROJECT DETAILS

© COPYRIGHT 2020 R.A. Smith, Inc.

DATE: 9/03/2020
SCALE: N.T.S.
JOB NO. 1201901
PROJECT MANAGER: LEN J. ROECKER, P.E., P.L.S.
DESIGNED BY: DRR
CHECKED BY: LJR

SHEET NUMBER
07

H:\1201901\Dwg\1201901h0.dwg, Details (2), 9/3/2020 7:56:29 AM, Drr

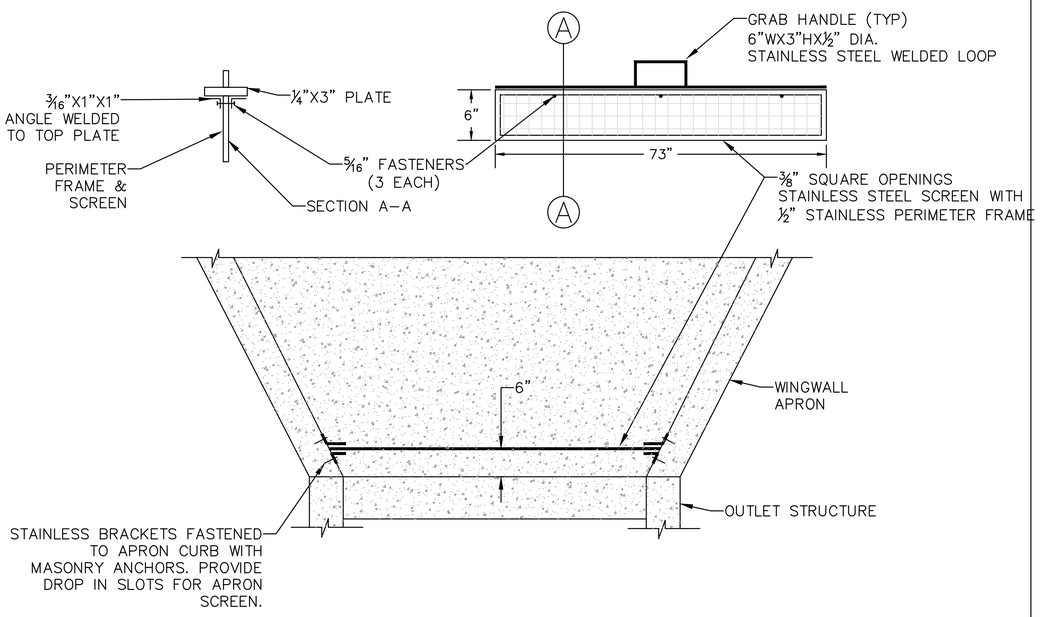

APRON SCREEN DETAIL
N.T.S

NOTE: ALL APRON SCREEN MATERIALS TO BE STAINLESS STEEL

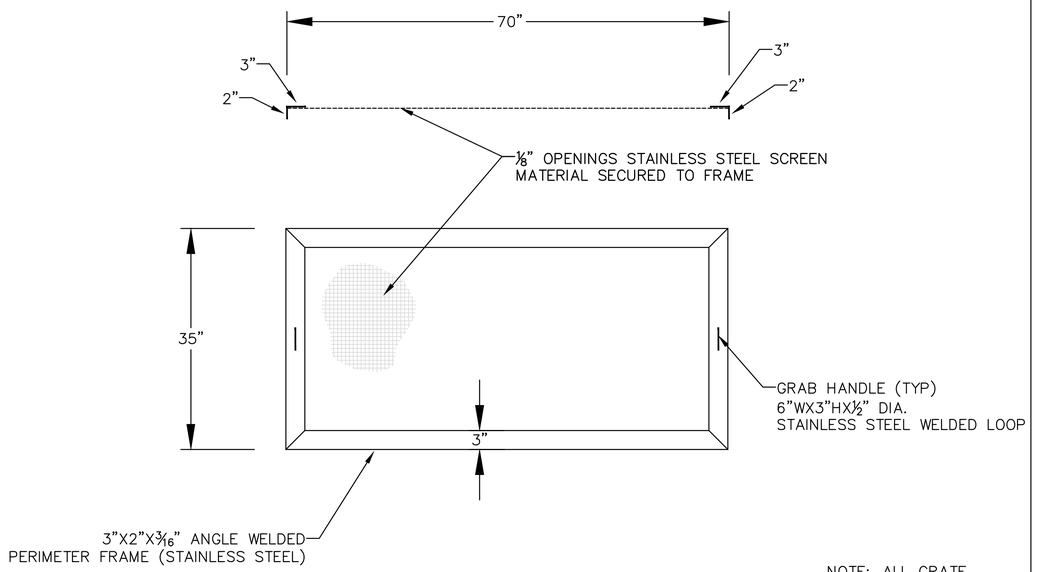

GRATE SCREEN DETAIL
N.T.S.

NOTE: ALL GRATE SCREEN MATERIALS TO BE STAINLESS STEEL

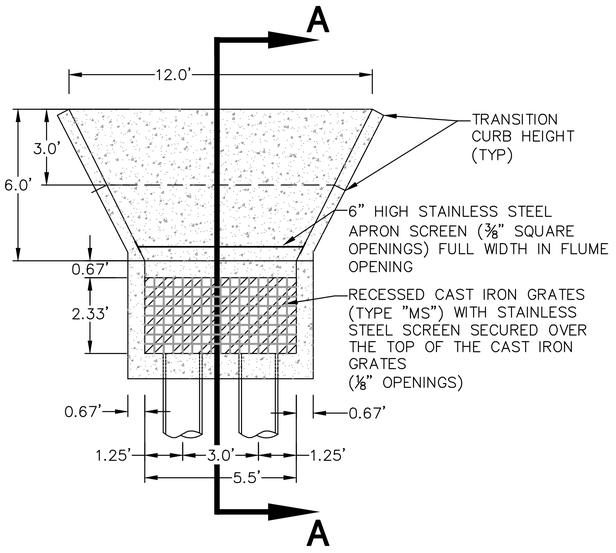

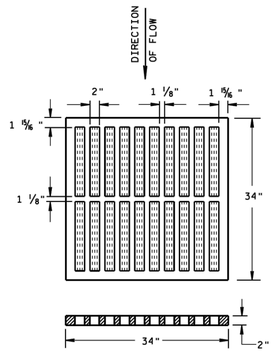

TYPE "MS" GRATE

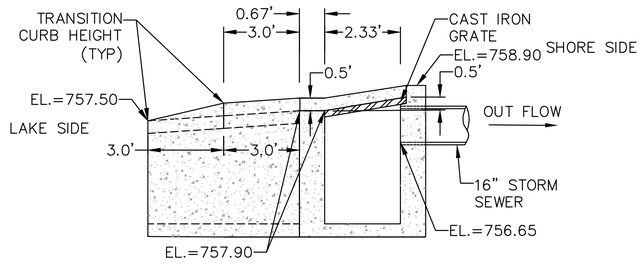

SECTION A–A

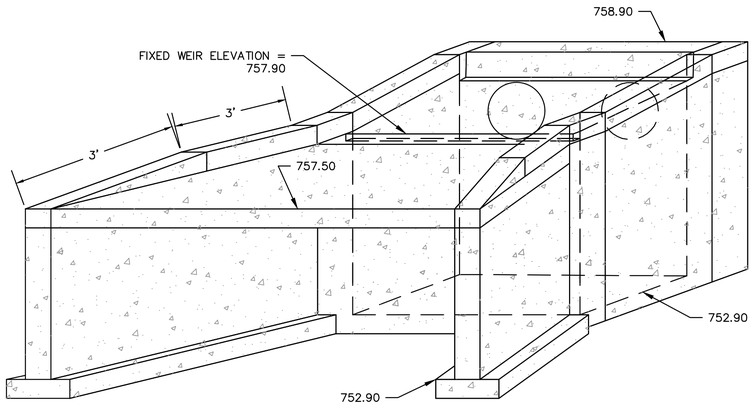

OUTLET CONTROL STRUCTURE DETAIL

R.A.SMITH, INC. ASSUMES NO RESPONSIBILITY FOR DAMAGES, LIABILITY OR COSTS RESULTING FROM CHANGES OR ALTERATIONS MADE TO THIS PLAN WITHOUT THE EXPRESSED WRITTEN CONSENT OF R.A.SMITH, INC.

DESCRIPTION	DATE

raSmith
CREATIVITY BEYOND ENGINEERING
16745 W. Bluemound Road
Brookfield, WI 53005-5938
(262) 781-1000
rasmith.com
Brookfield, WI | Milwaukee, WI | Appleton, WI | Madison, WI | Cedarburg, WI
Mount Pleasant, WI | Naperville, IL | Irvine, CA

TOWN OF WHEATLAND/LLP&RD
KENOSHA COUNTY, WISCONSIN

LILLY LAKE
OUTLET PROJECT
PROJECT DETAILS

© COPYRIGHT 2020
R.A. Smith, Inc.

DATE: 9/03/2020
SCALE: N.T.S.
JOB NO. 1201901
PROJECT MANAGER: LEN J. ROECKER, P.E., P.L.S.
DESIGNED BY: DRR
CHECKED BY: LJR

SHEET NUMBER
08

H:\120190\Dwg\1201901h0.dwg, Details (3), 9/3/2020 7:56:31 AM, Drr

DESIGN DATA

LIVE LOADING

DESIGN LOADING	100 P.S.F.

MATERIAL PROPERTIES

CONCRETE MASONRY	f'c = 3,500 PSI
HIGH STRENGTH BAR STEEL REINFORCEMENT	fy = 60,000 PSI

FOUNDATION DATA

INLET STRUCTURE TO BE SUPPORTED ON SUITABLE NATIVE SOIL WITH A NET ALLOWABLE BEARING CAPACITY OF 1,500 P.S.F. PROJECT GEOTECHNICAL ENGINEER TO EXAMINE THE FOUNDATION SOIL TO ENSURE THE ACTUAL FOUNDATION SOIL STRENGTH MEETS OR EXCEEDS THIS CAPACITY.

GENERAL NOTES

STRUCTURE SHALL BE CONSTRUCTED IN ACCORDANCE WITH THE WISCONSIN DEPARTMENT OF TRANSPORTATION STANDARD SPECIFICATIONS FOR HIGHWAY AND STRUCTURE CONSTRUCTION, CURRENT EDITION.

DRAWINGS SHALL NOT BE SCALED.

BAR STEEL REINFORCEMENT SHALL BE EMBEDDED 2" CLEAR UNLESS OTHERWISE SHOWN OR NOTED.

ALL DIMENSIONS ARE IN FEET AND INCHES. ALL ELEVATIONS ARE IN FEET.

BEVEL EDGES OF CONCRETE 3/4" UNLESS NOTED OTHERWISE.

CONCRETE TO BE AIR-ENTRAINED WITH AN AIR CONTENT OF 6% (±1%).

BACKFILL THE EXCAVATED SPACE BETWEEN THE INLET STRUCTURE WINGWALLS WITH TYPE B STRUCTURE BACKFILL. BACKFILL MATERIAL, PLACEMENT, AND COMPACTION TO BE PER SECTION 210 OF THE STANDARD SPECIFICATIONS.

◑ ALTERNATE ANCHORAGE: CONCRETE ADHESIVE ANCHORS 5/8-INCH. EMBED 9" IN CONCRETE. ADHESIVE ANCHORS SHALL CONFORM TO SECTIONS 502.2.12 AND 502.3.14 OF THE STANDARD SPECIFICATIONS.

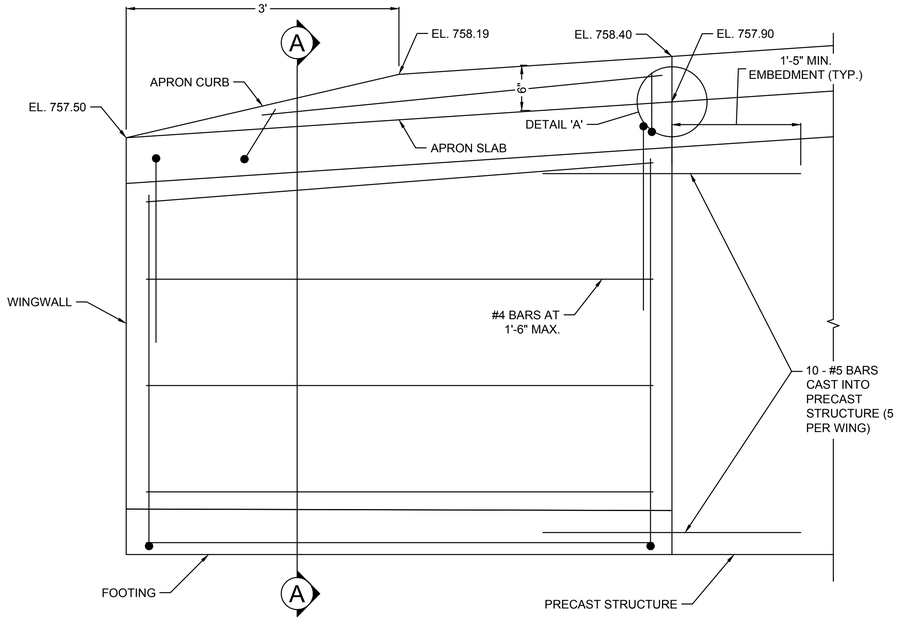

ELEVATION - WINGWALL

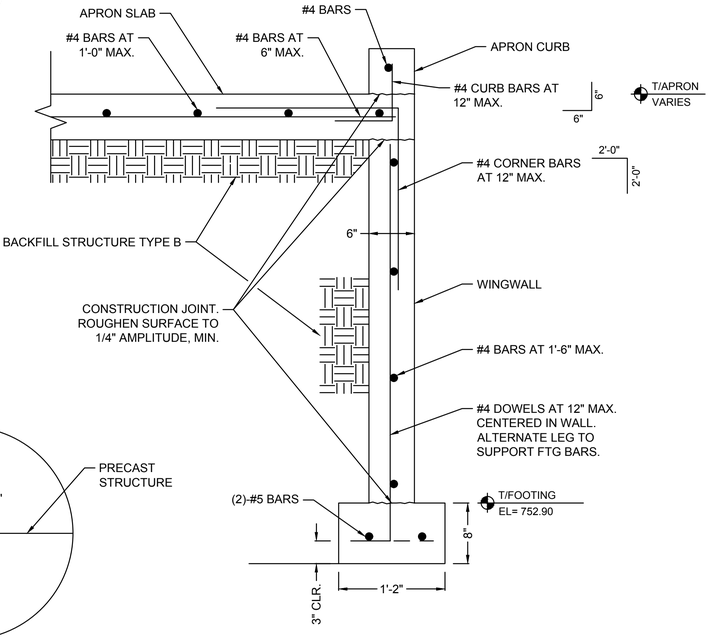

SECTION A

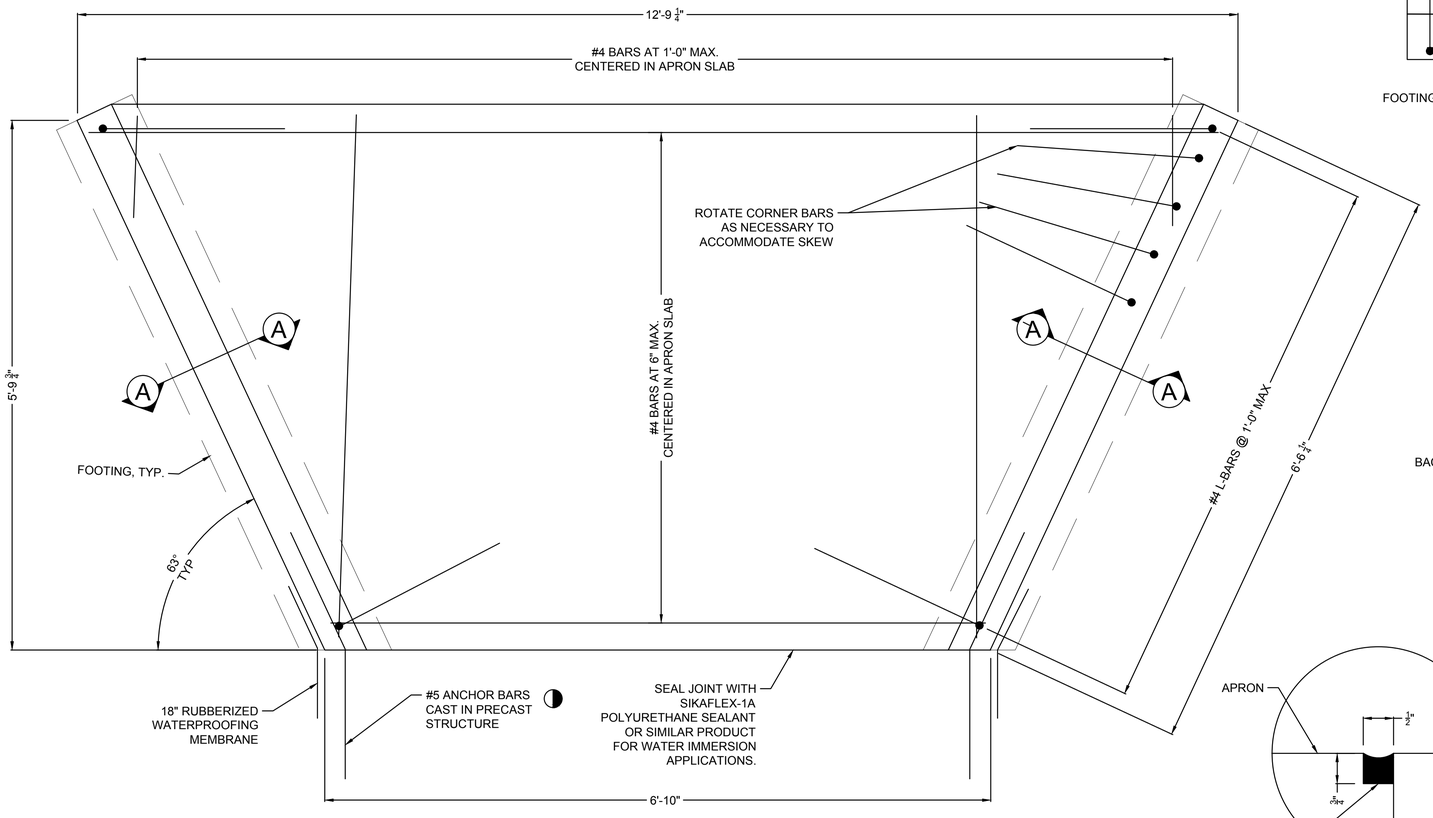

PLAN - INLET APRON

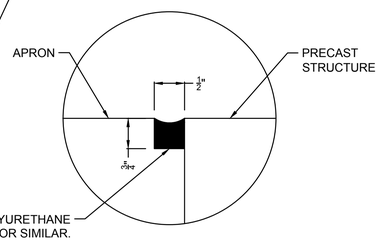

DETAIL 'A'

R.A.SMITH, INC. ASSUMES NO RESPONSIBILITY FOR DAMAGES, LIABILITY OR COSTS RESULTING FROM CHANGES OR ALTERATIONS MADE TO THIS PLAN WITHOUT THE EXPRESSED WRITTEN CONSENT OF R.A.SMITH, INC.

DESCRIPTION	DATE

raSmith
CREATIVITY BEYOND ENGINEERING
16745 W. Bluemound Road
Brookfield, WI 53005-5938
(262) 781-1000
rasmith.com
Brookfield, WI | Milwaukee, WI | Appleton, WI | Madison, WI | Cedarburg, WI
Mount Pleasant, WI | Naperville, IL | Irvine, CA

TOWN OF WHEATLAND/LLP&RD
KENOSHA COUNTY, WISCONSIN

LILLY LAKE
OUTLET PROJECT
PROJECT DETAILS

© COPYRIGHT 2020
R.A. Smith, Inc.

DATE: **9/03/2020**
SCALE: **N.T.S.**
JOB NO. **1201901**
PROJECT MANAGER: **LEN J. ROECKER, P.E., P.L.S.**
DESIGNED BY: **DRR**
CHECKED BY: **LJR**

SHEET NUMBER
09

H:\1201901\Dwg\1201901h0.dwg, Details (4), 9/3/2020 7:56:34 AM, Drr

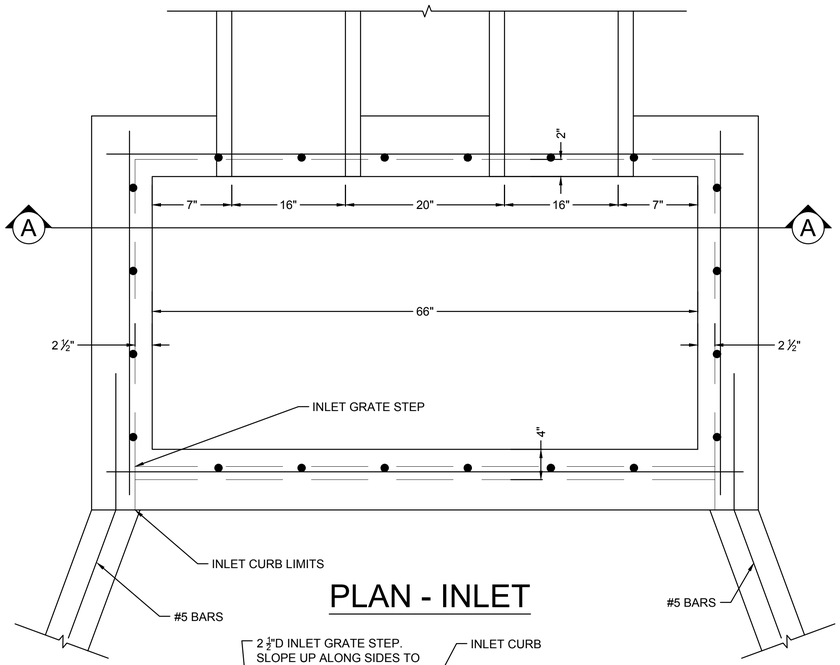

PLAN - INLET

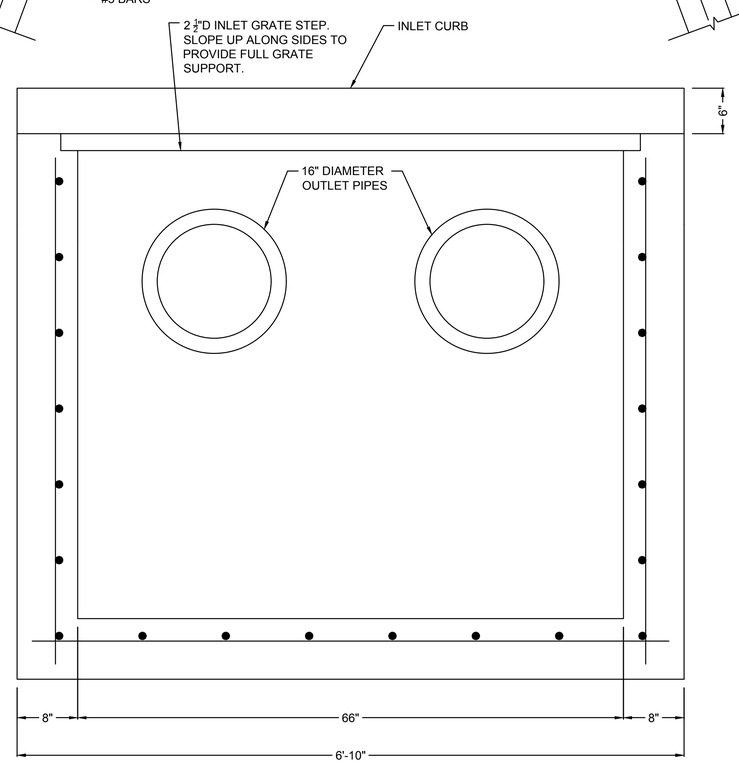

DESIGN DATA

MATERIAL PROPERTIES

CONCRETE MASONRY	f'c = 3,500 PSI
HIGH STRENGTH BAR STEEL REINFORCEMENT	fy = 60,000 PSI

GENERAL NOTES

DETAILS OF CONSTRUCTION, MATERIALS AND WORKMANSHIP NOT SHOWN ON THIS DRAWING SHALL CONFORM TO THE PERTINENT REQUIREMENT OF THE WISCONSIN DEPARTMENT OF TRANSPORTATION STANDARD SPECIFICATIONS FOR HIGHWAY AND STRUCTURE CONSTRUCTION, CURRENT EDITION.

DETAILED DRAWINGS FOR PROPOSED ALTERNATE DESIGNS FOR INLETS WHICH MAY INCLUDE REINFORCED CONCRETE CAST-IN-PLACE STRUCTURE, SHALL BE SUBMITTED TO THE ENGINEER FOR APPROVAL PROVIDING THAT SUCH ALTERNATE DESIGNS MAKE PROVISION FOR EQUIVALENT CAPACITY AND STRENGTH.

INLET STRUCTURE SHALL BE PLACED ON A BED OF MATERIAL AT LEAST 6 INCHES IN DEPTH, WHICH MEETS THE REQUIREMENTS OF FOUNDATION BACKFILL. THIS BEDDING SHALL BE COMPACTED AND PROVIDE UNIFORM SUPPORT FOR THE ENTIRE AREA OF THE BASE.

DRAWINGS SHALL NOT BE SCALED.

BAR STEEL REINFORCEMENT SHALL BE EMBEDDED 2" CLEAR UNLESS OTHERWISE SHOWN OR NOTED.

ALL DIMENSIONS ARE IN FEET AND INCHES. ALL ELEVATIONS ARE IN FEET.

BEVEL EDGES OF CONCRETE 3/4" UNLESS NOTED OTHERWISE.

CONCRETE TO BE AIR-ENTRAINED WITH AN AIR CONTENT OF 6% (±1%).

PRECAST INLET STRUCTURE SHALL CONFORM TO THE PERTINENT REQUIREMENTS OF ASTM C 913.

◑ ALTERNATE ANCHORAGE: CONCRETE ADHESIVE ANCHORS 5/8-INCH. EMBED 9" IN CONCRETE. ADHESIVE ANCHORS SHALL CONFORM TO SECTIONS 502.2.12 AND 502.3.14 OF THE STANDARD SPECIFICATIONS.

(1) PROVIDE REINFORCING STEEL IN ACCORDANCE TO ASTM C 913.

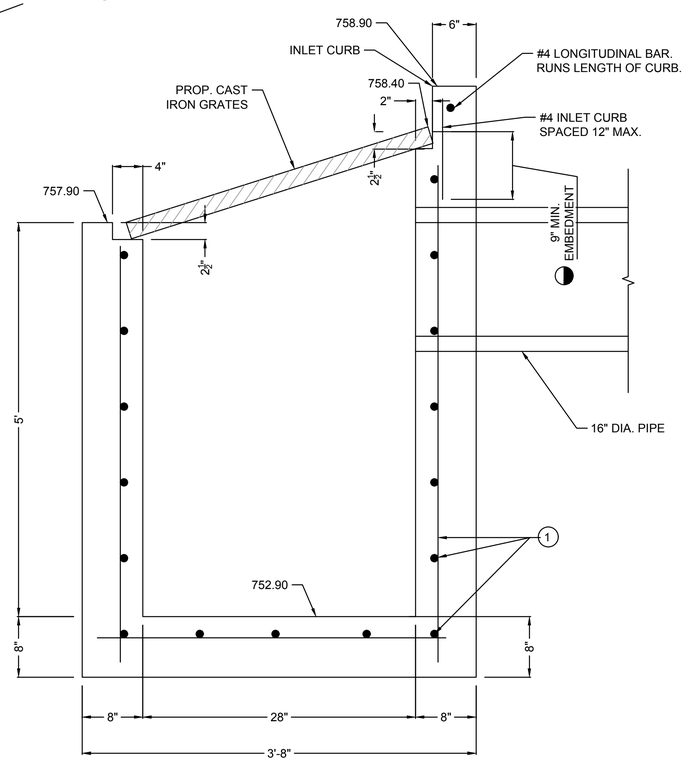

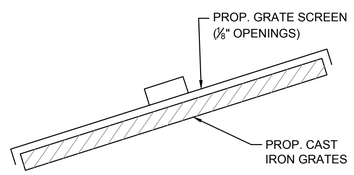

R.A.SMITH, INC. ASSUMES NO RESPONSIBILITY FOR DAMAGES, LIABILITY OR COSTS RESULTING FROM CHANGES OR ALTERATIONS MADE TO THIS PLAN WITHOUT THE EXPRESSED WRITTEN CONSENT OF R.A.SMITH, INC.

DATE	DESCRIPTION

raSmith
CREATIVITY BEYOND ENGINEERING
16745 W. Bluemound Road
Brookfield, WI 53005-5938
(262) 781-1000
rasmith.com
Brookfield, WI | Milwaukee, WI | Appleton, WI | Madison, WI | Cedarburg, WI
Mount Pleasant, WI | Naperville, IL | Irvine, CA

TOWN OF WHEATLAND/LLP&RD
KENOSHA COUNTY, WISCONSIN

LILLY LAKE
OUTLET PROJECT
PROJECT DETAILS

© COPYRIGHT 2020
R.A. Smith, Inc.

DATE: **9/03/2020**
SCALE: **N.T.S.**
JOB NO. **1201901**
PROJECT MANAGER:
LEN J. ROECKER, P.E., P.L.S.
DESIGNED BY: **DRR**
CHECKED BY: **LJR**

SHEET NUMBER
10

H:\1201901\Dwg\1201901h0.dwg, Details (6), 9/3/2020 7:56:35 AM, Dnr

SDD 8f6 Reinforced Concrete Apron Endwall for Pipe Underdrain

DIMENSIONS IN INCHES											
PIPE DIA.	A	B	C	D	E	F	G	H	J	L	Z
~~**4~~	~~6~~	~~12~~	~~5¼~~	~~8~~	~~8~~	~~38~~	~~36~~	~~11~~	~~2¾~~	~~6½~~	~~4~~
6	8	14	7¾"	11	10	42	44	13	3⅝	8½	6

**APRON ENDWALL FOR 6 INCH DIAMETER PIPE MAY BE SUBSTITUTED FOR THIS SIZE PROVIDED THE HOLE IN THE HEADWALL IS SIZED AND LOCATED TO CONFORM TO THE 4 INCH DIAMETER PIPE DIMENSIONS (C & J)

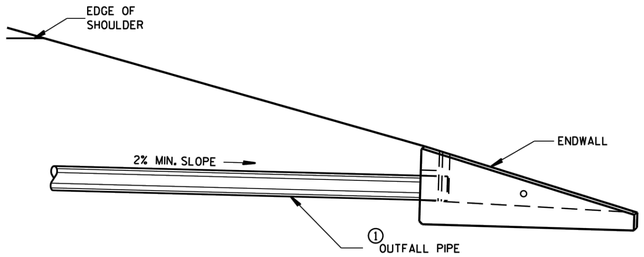

INSTALLATION DETAIL

GENERAL NOTES

DETAILS OF CONSTRUCTION, MATERIALS AND WORKMANSHIP NOT SHOWN ON THIS DRAWING SHALL CONFORM TO THE PERTINENT REQUIREMENTS OF THE STANDARD SPECIFICATIONS AND THE APPLICABLE SPECIAL PROVISIONS.

ALTERNATIVE DESIGNS WHICH PROVIDE EQUIVALENT CAPACITY AND STRENGTH MAY BE USED WHEN APPROVED BY THE ENGINEER. ENDWALL MAY BE EITHER PRECAST OR CAST-IN-PLACE CONCRETE.

THE UNDERDRAIN PIPE SHALL BE FULLY INSERTED AND SEALED INTO THE ENDWALL WITH CEMENT MORTAR PRIOR TO BACKFILLING AROUND THE STRUCTURE.

THE UPPERMOST POINT OF THE ENDWALL SHALL BE PLACED FLUSH WITH THE ROADWAY SLOPE. ADJACENT EMBANKMENT SLOPES SHALL BE SHAPED TO FIT THE SIDES AND TOE OF THE ENDWALL. EXACT PLACEMENT OF THE OUTFALL PIPE AND ENDWALL SHALL BE DETERMINED BY THE ENGINEER TO MATCH THE ELEVATIONS AND FLOW DIRECTION OF THE ROADSIDE DITCH.

① THE OUTFALL PIPE UNDERDRAIN AND FITTINGS SHALL CONFORM TO THE REQUIREMENTS OF THE SPECIFICATION FOR POLY (VINYL CHORIDE) (PVC) PLASTIC DRAIN, WASTE AND VENT PIPE AND FITTINGS, ASTM DESIGNATION: D 2665, SCHEDULE 40 PVC OR THE STANDARD SPECIFICATION FOR TYPE PSM POLY (VINYL CHORIDE) (PVC) SEWER PIPE AND FITTINGS, ASTM DESIGNATION: D 3034, TYPE PSM SDR 23.5 PVC SEWER PIPE, ALL JOINTS SHALL BE SOLVENT WELDED.

THE OUTFALL PIPE INCLUDING ALL FITTINGS AND THE RODENT SHIELD SHALL BE MEASURED AND PAID FOR AS PIPE UNDERDRAIN UNPERFORATED.

② THE RODENT SHIELD SHALL BE A PVC GRATE SIMILAR TO THIS DETAIL. THE GRATE IS COMMERCIALLY AVAILABLE AS A FLOOR STRAINER. A PIPE COUPLING IS REQUIRED FOR THE ATTACHMENT OF THIS SHIELD TO THE OUTFALL PIPE. THE SHIELD SHALL BE FASTENED TO THE PIPE COUPLING WITH TWO OR MORE NO. 10 X 1-INCH STAINLESS STEEL SHEET METAL SCREWS.

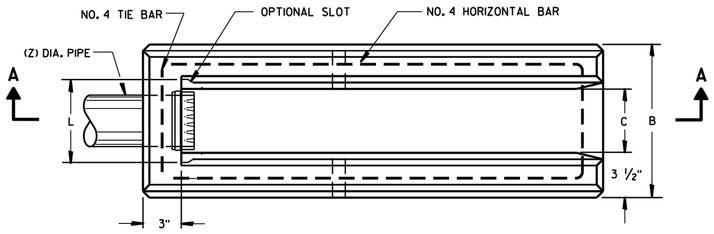

PLAN VIEW

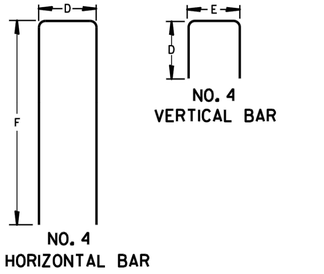

BAR STEEL REINFORCEMENT DETAILS

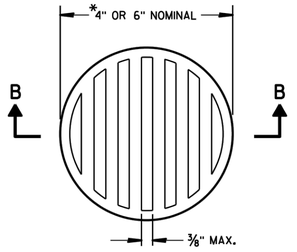

② RODENT SHIELD

NOTE: ORIENT SHIELD SO SLOTS ARE VERTICAL.

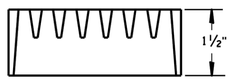

SECTION B-B

*NOTE: DIMENSIONS ARE APPROXIMATE. THE GRATE IS SIZED TO FIT INTO A PIPE COUPLING.

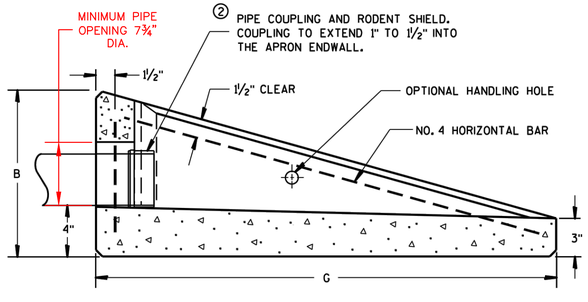

SECTION A-A

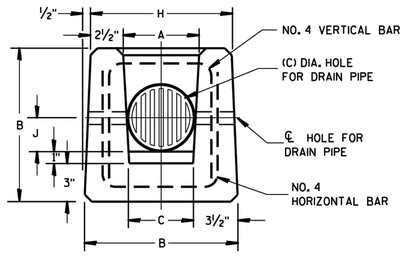

END VIEW

CONCRETE APRON ENDWALL FOR UNDERDRAIN

REINFORCED CONCRETE APRON ENDWALL FOR PIPE UNDERDRAIN	
STATE OF WISCONSIN DEPARTMENT OF TRANSPORTATION	
APPROVED	
3-10-98 DATE	/S/ Rory L. Rhinesmith CHIEF ROADWAY DEVELOPMENT ENGINEER
FHWA	

S.D.D. 8 F 6-4

6

S.D.D. 8 F 6-4

6

R.A.SMITH, INC. ASSUMES NO RESPONSIBILITY FOR DAMAGES, LIABILITY OR COSTS RESULTING FROM CHANGES OR ALTERATIONS MADE TO THIS PLAN WITHOUT THE EXPRESSED WRITTEN CONSENT OF R.A.SMITH, INC.

DESCRIPTION | DATE

raSmith
CREATIVITY BEYOND ENGINEERING
16745 W. Bluemound Road
Brookfield, WI 53005-5938
(262) 781-1000
rasmith.com
Brookfield, WI | Milwaukee, WI | Appleton, WI | Madison, WI | Cedarburg, WI
Mount Pleasant, WI | Naperville, IL | Irvine, CA

TOWN OF WHEATLAND/LLP&RD
KENOSHA COUNTY, WISCONSIN

LILLY LAKE
OUTLET PROJECT
PROJECT DETAILS

© COPYRIGHT 2020
R.A. Smith, Inc.

DATE: 9/03/2020
SCALE: N.T.S.
JOB NO. 1201901
PROJECT MANAGER: LEN J. ROECKER, P.E., P.L.S.
DESIGNED BY: DRR
CHECKED BY: LJR

SHEET NUMBER
11

H:\1201901\Dwg\1201901h0.dwg, Details (5), 9/3/2020 7:56:36 AM, Drr